218 Little Falls Road Unit 3
Cedar Grove, NJ 07009
PHONE: 973-239-3964
FAX: 973-239-3965

DATA SHEET

Please reference Visual Alchemy Product ID:81

1956 20" Admiral T23B6N (PROP)

Manufacturer: Admiral

Model: T23B6N

Serial: 43E2492

Height: 19.75"

Width: 23.25"

Depth: 22.5"

Inputs: RF

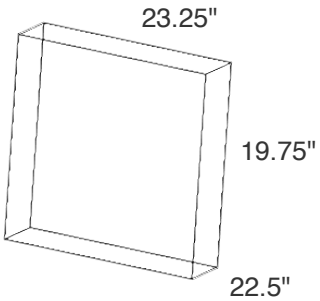

https://www.visualalchemy.tv/product/1956_20_admiral_t23b6n_prop_81