218 Little Falls Road Unit 3
Cedar Grove, NJ 07009
PHONE: 973-239-3964
FAX: 973-239-3965

DATA SHEET

Please reference Visual Alchemy Product ID:2618

1980 19" Sony PVM-1900

Manufacturer: Sony

Model: PVM-1900

Height: 19.5"

Width: 19.5"

Depth: 15.5"

Inputs: composite

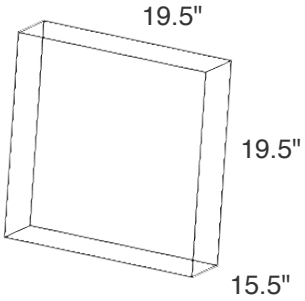

https://www.visualalchemy.tv/product/1980_19_sony_pvm-1900_2618