218 Little Falls Road Unit 3
Cedar Grove, NJ 07009
PHONE: 973-239-3964
FAX: 973-239-3965

DATA SHEET

Please reference Visual Alchemy Product ID:198

1990's 25" Sony PVM-2530

Manufacturer: Sony

Model: PVM-2530

Height: 19.75"

Width: 25.5"

Depth: 19.25"
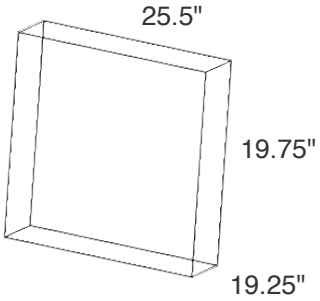
Inputs: composite, component, VGA